Analysis of Sliding Mode Controllers in the Frequency Domain

Leonid Fridman
lfridman@unam.mx

Facultad de Ingeniería
National Autonomous University of Mexico (UNAM)

Outline

1. Introduction
   - Describing Function Method
   - Oscillations in SMC systems

2. DF analysis of conventional SMC and 2-SMC algorithms
   - Conventional SMC: DF Analysis
   - Twisting Algorithm: DF Analysis
   - Terminal Control Law: DF Analysis
   - Super-twisting Algorithm: DF Analysis

Introduction DF

DF technique is:

- Applied to nonlinear systems where the nonlinear part can be separated from the linear part.
- Based on the hypothesis of law pass filter. i.e. that the input of the nonlinear part is sinusoidal.

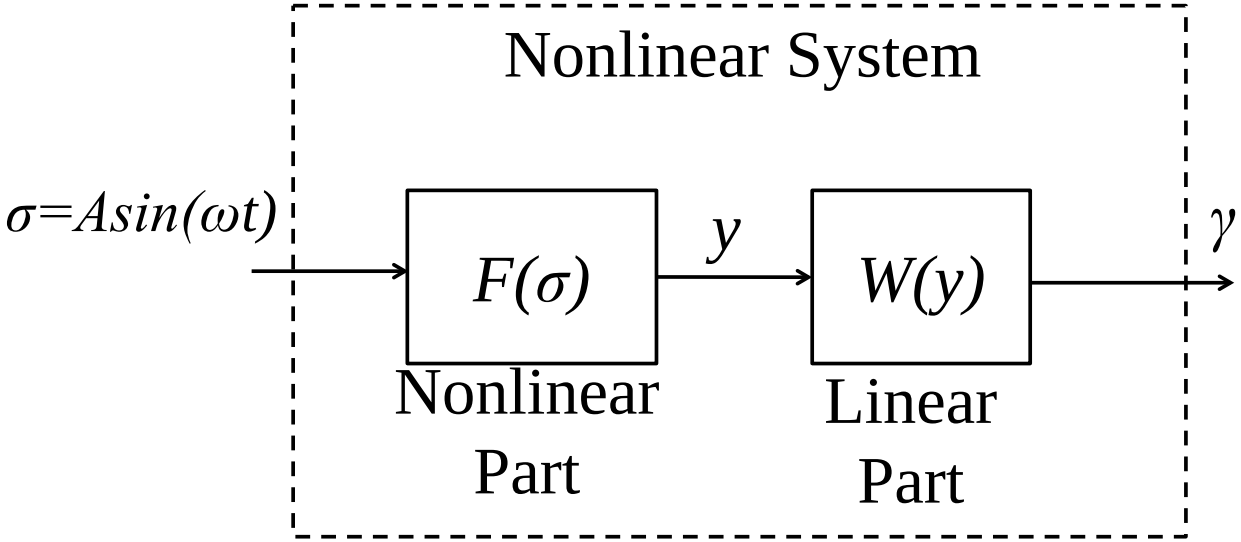

Introduction DF

- Based on the Fourier series representation of the nonlinearity.

$$y = F(A\sin\omega t) = \frac{a_0}{2} + \Sigma_{n=1}^{\infty}(a_n\cos n\omega t + b_n\sin n\omega t)$$

$$\begin{aligned} a_0 &= \frac{\omega}{\pi}\int_0^{2\pi/\omega} F(A\sin\omega t)dt; \\ a_n &= \frac{\omega}{\pi}\int_0^{2\pi/\omega} F(A\sin\omega t)\cos n\omega t dt; \\ b_n &= \frac{\omega}{\pi}\int_0^{2\pi/\omega} F(A\sin\omega t)\sin n\omega t dt. \end{aligned}$$

Introduction DF

Main hypothesis: Linear part is a low pass filter.

Closed loop system, the output can be approximated

$$y = F(A\sin\omega t) \quad \approx \quad \frac{a_0}{2} + \Sigma_{n=1}^{\infty}(a_1\cos\omega t + b_1\sin\omega t)$$

$$a_2, a_3, \ldots \approx 0 \quad ; \quad b_2, b_3, \ldots \approx 0$$

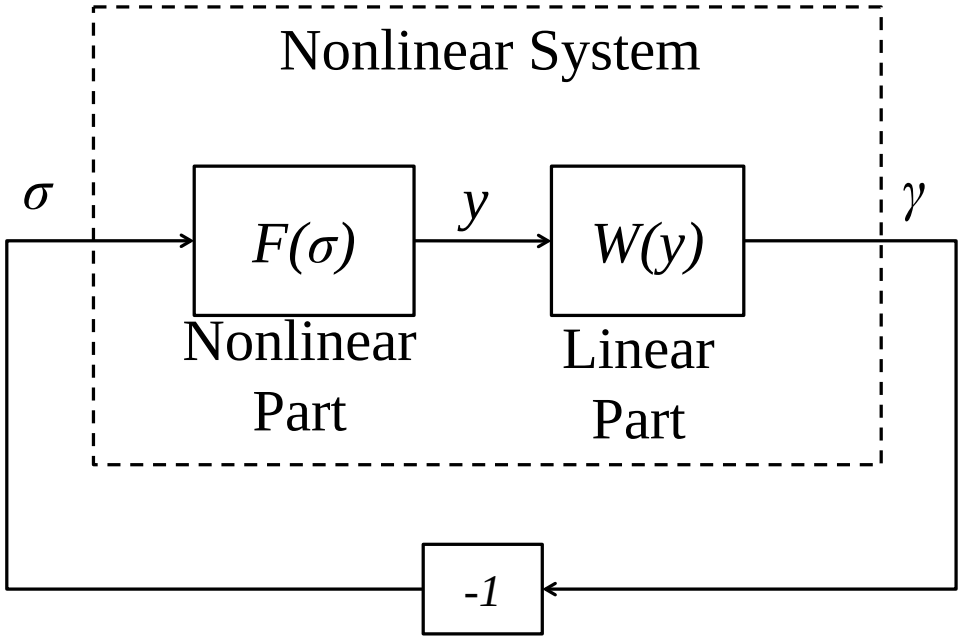

Introduction DF

DF is an equivalent complex gain of the nonlinear part

$$F(\sigma) = N(A, \omega)\sigma$$

For symmetric nonlinearities

$$N(A, \omega) = \frac{\omega}{\pi A} \int_0^{2\pi/\omega} F(A \sin \omega t) \sin \omega t dt + j \frac{\omega}{\pi A} \int_0^{2\pi/\omega} F(A \sin \omega t) \cos \omega t dt$$

DF and Harmonic Balance

Harmonic Balance condition

$$1 + W(j\omega)N(A,\omega) = 0; \qquad W(j\omega) = -\frac{1}{N(A,\omega)}$$

- Identify oscillations
- Find frequency ω and amplitude A of the oscillations

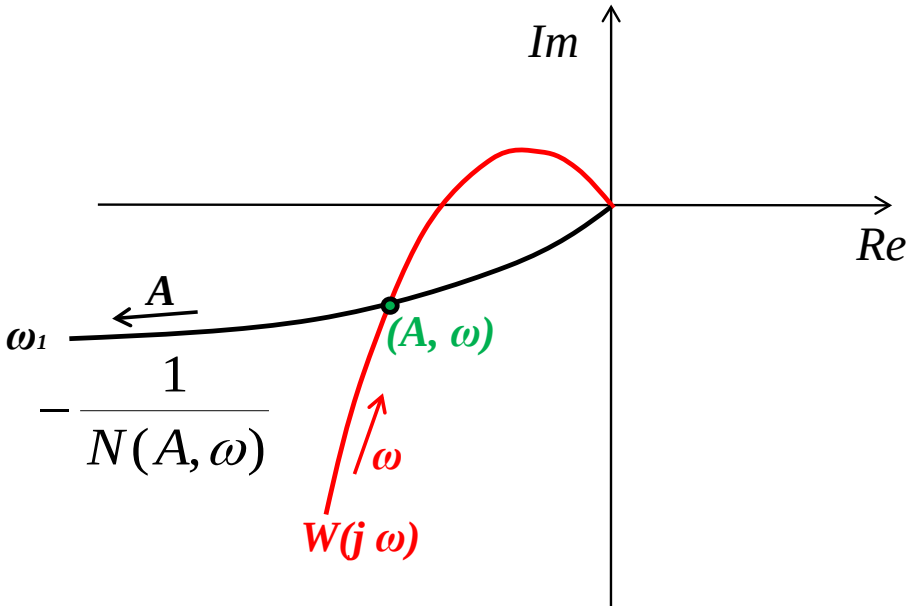

Oscillations in SMC systems

NO ONE MODEL TAKES INTO ACCOUNT ALL SYSTEM DYNAMICS!!!
The phenomenon of **chattering** is caused by the inevitable existence of un-modeled dynamics.

The principal dynamics are the dynamics of the plant is a model that are used for controller design.

The un-modeled dynamics are not accounted during the SMC design; delays, actuators, sensors, etc.

The relative degree increases and the real sliding mode emerges, where the sliding variable contains a limit cycle (chattering) with **finite frequency** and **finite amplitude**.

DF in SMC

Systems driven by SMC can be analyzed by the frequency domain, when the un-modeled dynamics are taken into account.

DF-HB technique is applied to identify limit cycles (chattering) and estimate their parameters, **amplitude** and **frequency**.

$$N(A,\omega) = \frac{\omega}{\pi A}\int_0^{2\pi/\omega} u(t)\sin\omega t dt + j\frac{\omega}{\pi A}\int_0^{2\pi/\omega} u(t)\cos\omega t dt$$

$N(A,\omega)$ is the DF of SMC algorithm.

Conventional SMC: DF Analysis

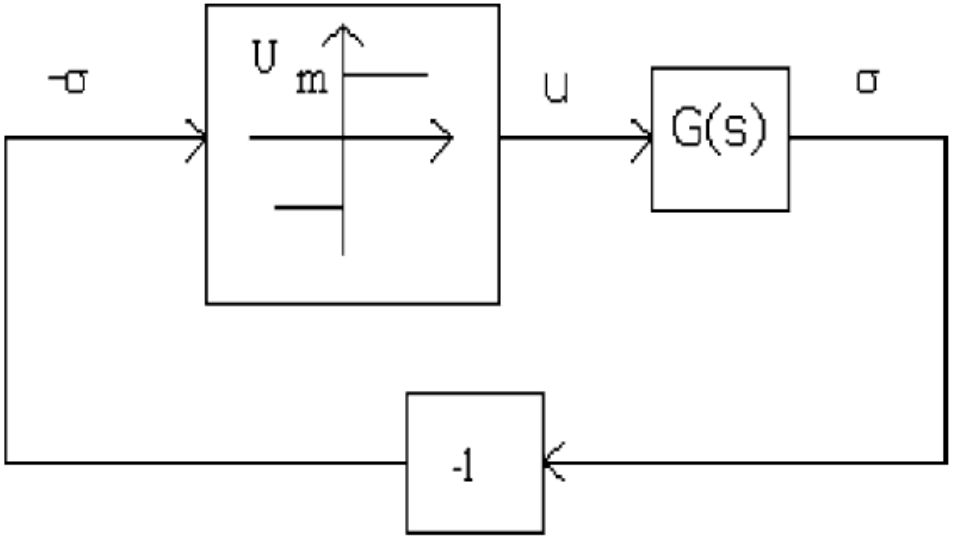

Figure: Block diagram of a linear system with relay control and ideal sliding

Replace the Laplace variable s by $j\omega$,

$$-\sigma = A_c \sin \omega_c t, \tag{1}$$

ω_c is frequency

Conventional SMC: DF Analysis

Amplitude A_c and Frequency ω_c have to satisfy the Harmonic Balance (HB) eq.

$$G(j\omega) = -\frac{1}{N(A,\omega)}. \tag{2}$$

For conventional SMC, $N(A,\omega)$ DOES NOT DEPEND ON ω

$$N(A) = \frac{4U_m}{\pi A} \tag{3}$$

Conventional SMC:DF analysis

Example of **Ideal SMC**

$$\begin{aligned} \dot{x}_1 &= x_2 \\ \dot{x}_2 &= -x_1 - x_2 + u \\ \sigma &= x_1 + x_2 \end{aligned} \tag{4}$$

with control

$$u = -\text{sign}(\sigma) \tag{5}$$

Transfer function

$$G(s) = \frac{s+1}{s^2+s+1} \tag{6}$$

HB eq.

$$\text{Re}\,[G(j\omega] = -\frac{\pi A}{4U_m} \tag{7}$$

Conventional SMC: DF analysis

Example of **Ideal SMC**

Real part

$$\frac{1-\omega+\omega^2}{\left(1-\omega^2\right)^2+\omega^2}=-\frac{\pi A}{4U_m} \tag{8}$$

Imaginary part

$$\frac{\omega^2}{\left(1-\omega^2\right)^2+\omega^2}=0 \tag{9}$$

Ideal sliding-mode

$$A_c=0,\ \omega_c\to\infty \tag{10}$$

Conventional SMC: DF analysis

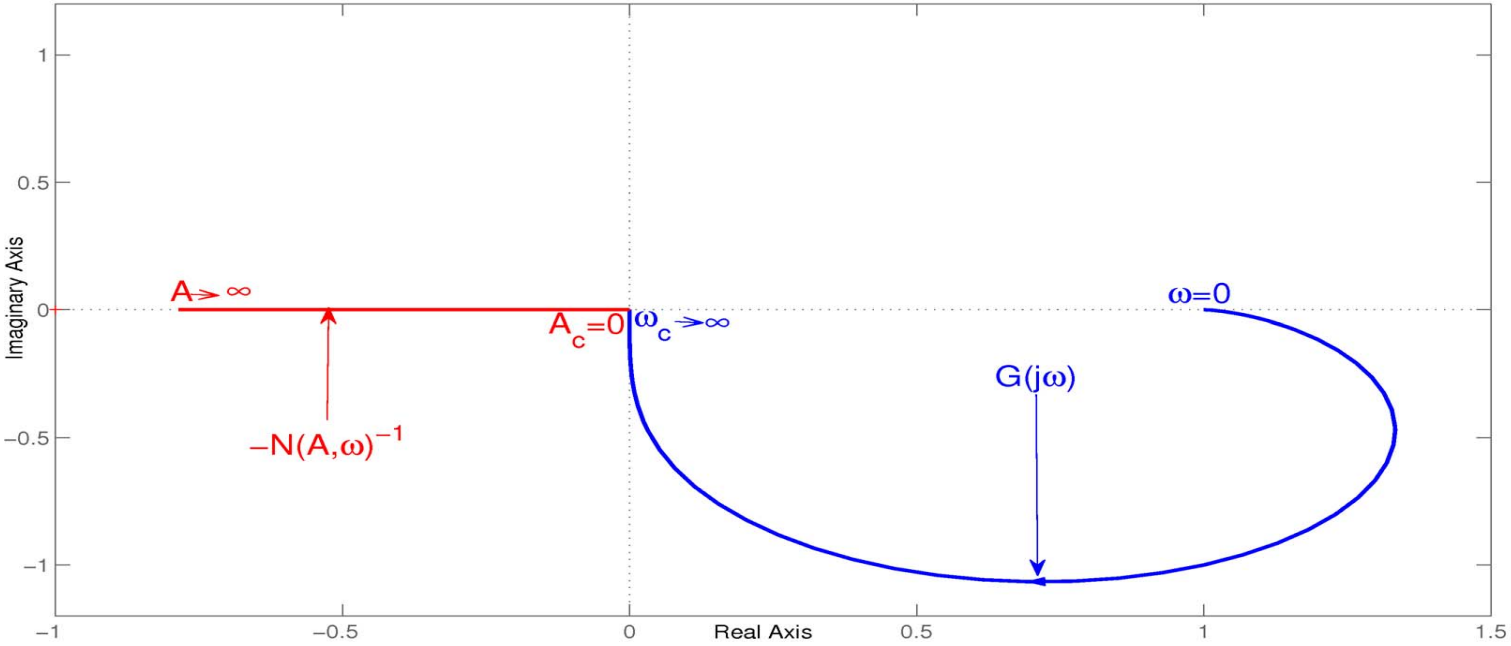

Figure: Graphical solution of the harmonic balance equation for system $G(s)$

Phase deficit is 90 grade. Finite time convergence!

Conventional SMC: DF analysis

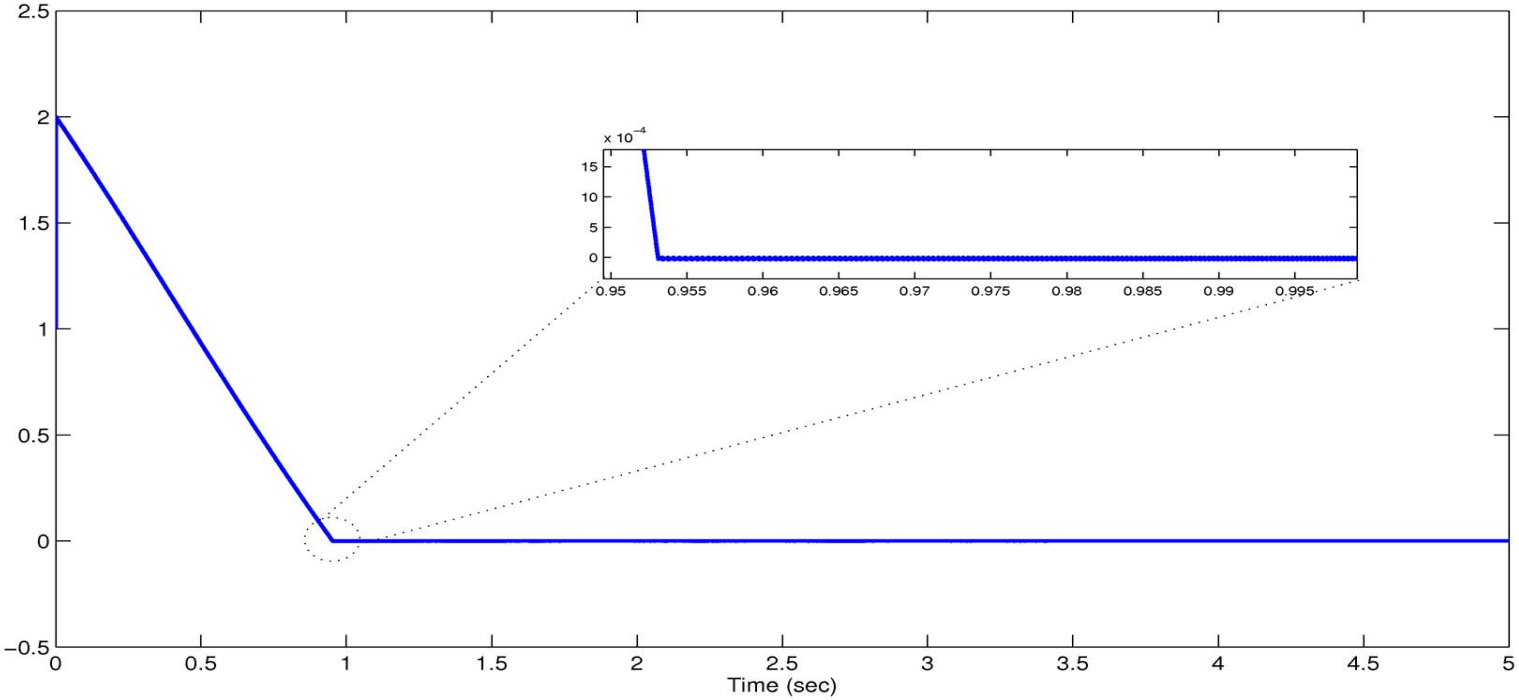

Figure: Surface

Phase deficit is 90 grade. Finite time convergence!

Conventional SMC: DF analysis

Example of **Real SMC**

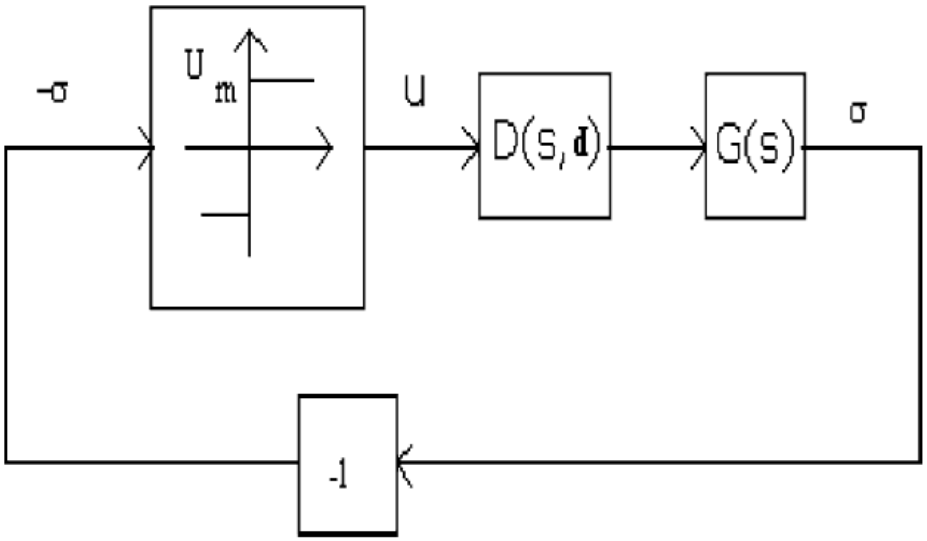

Figure: Block diagram of a linear system with Real SMC

$$D(j\omega, \mathbf{d})G(j\omega) = -\frac{1}{N(A,\omega)}, \quad N(A,\omega) = \frac{4U_m}{\pi A} \tag{11}$$

$D(j\omega, \mathbf{d})$ un-modelled dynamics

Conventional SMC: DF analysis

Example of **Real SMC**

Plant

$$\begin{aligned} \dot{x}_1 &= x_2; \\ \dot{x}_2 &= -x_1 - x_2 + u_a; \end{aligned}$$

Actuator

$$0.01\dot{u}_a = -u_a + u;$$

Sliding surface

$$\sigma = x_1 + x_2;$$

Conventional SMC

$$u = -\text{sign}(\sigma) \tag{12}$$

Transfer function

$$D(s,d)G(s) = \frac{s+1}{(0.01s+1)(s^2+s+1)} \tag{13}$$

Conventional SMC: DF analysis

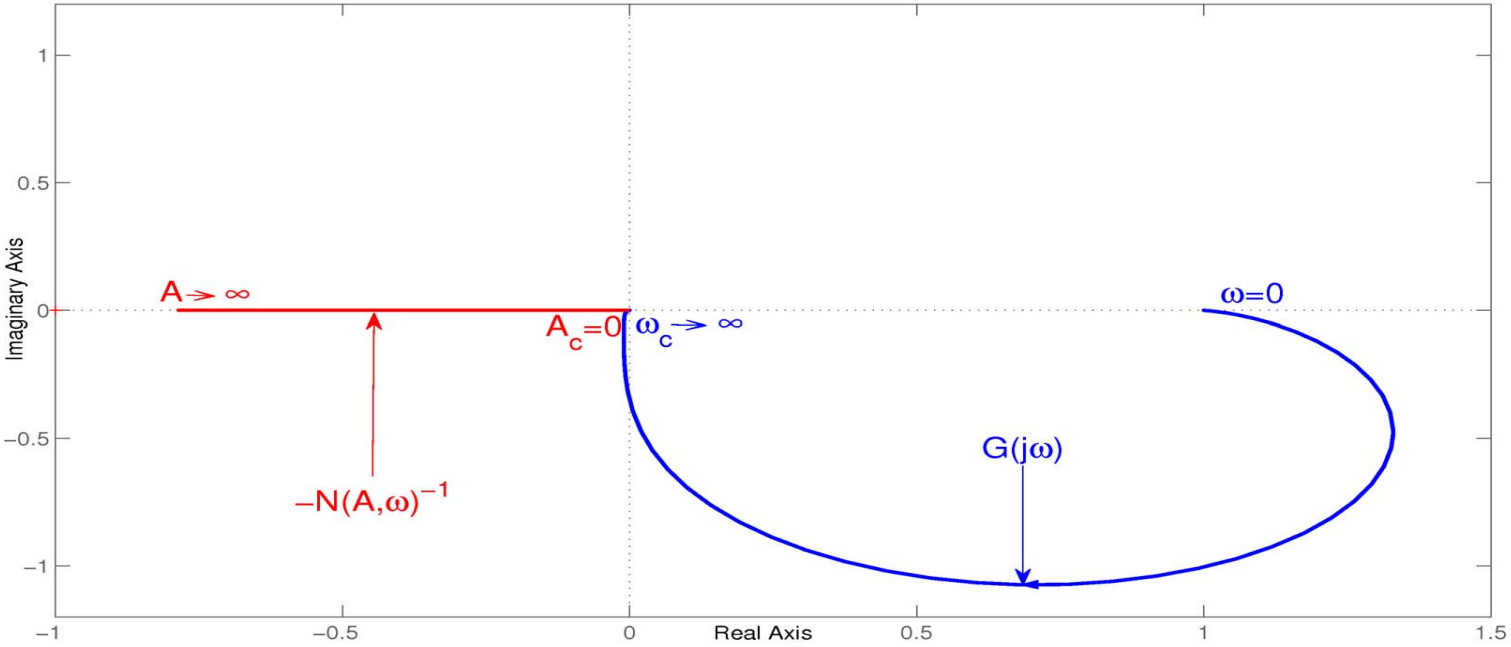

Figure: Graphical solution of the HB eq for system $D(s,d)G(s)$ plus 1st order actuator

The phase dificit is 0. Only asymptotic converence.

Conventional SMC: DF analysis

The phase dificit is 0. Only asymptotic converence.

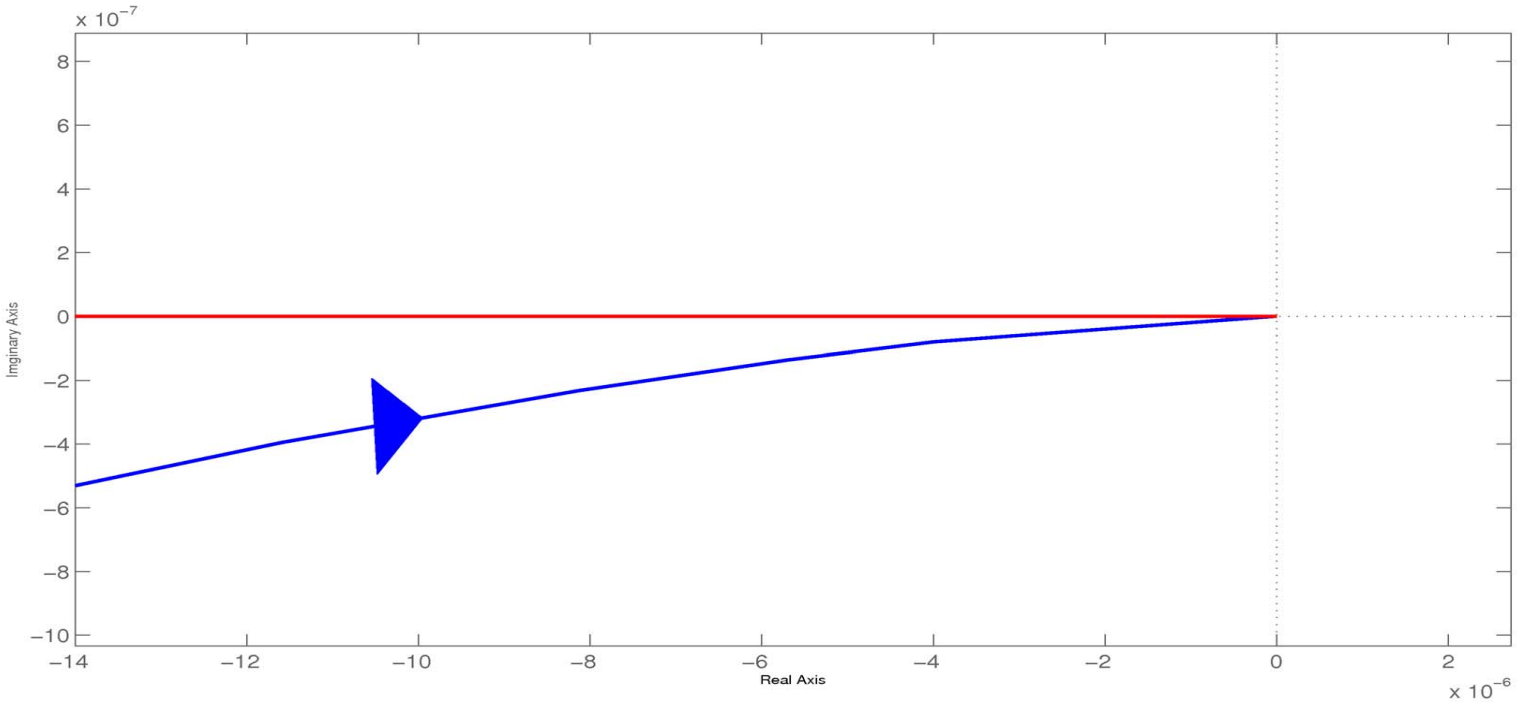

Figure: Zoom

Conventional SMC: DF analysis

The phase dificit is 0. Only asymptotic converence.

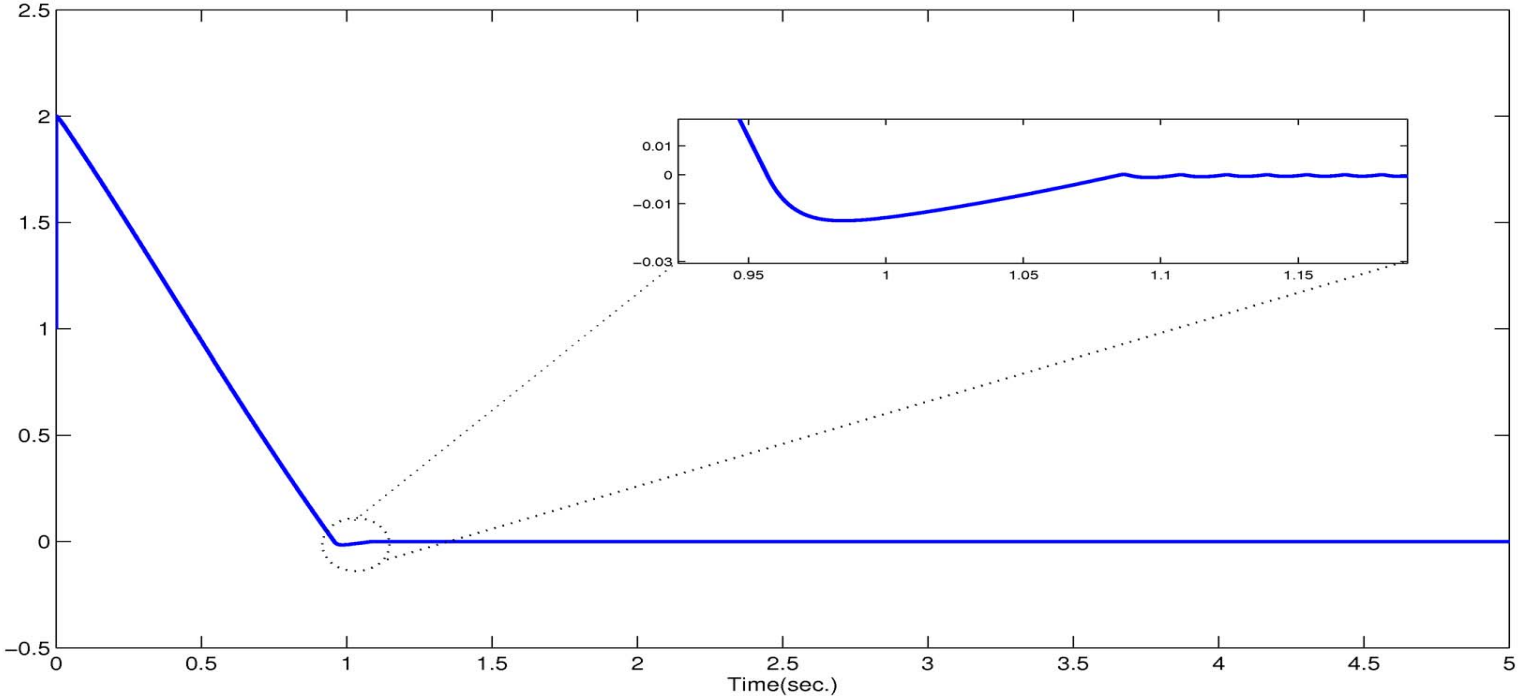

Figure: Surface

Conventional SMC: DF analysis

Plant plus 2nd order actuator

$$\dot{x}_1 = x_2 \quad ; \quad 0.0001\ddot{u}_a = -0.01\dot{u}_a - u_a + u$$

$$\dot{x}_2 = -x_1 - x_2 + u_a \quad ; \quad \sigma = x_1 + x_2$$

$$u = -\text{sign}(\sigma)$$

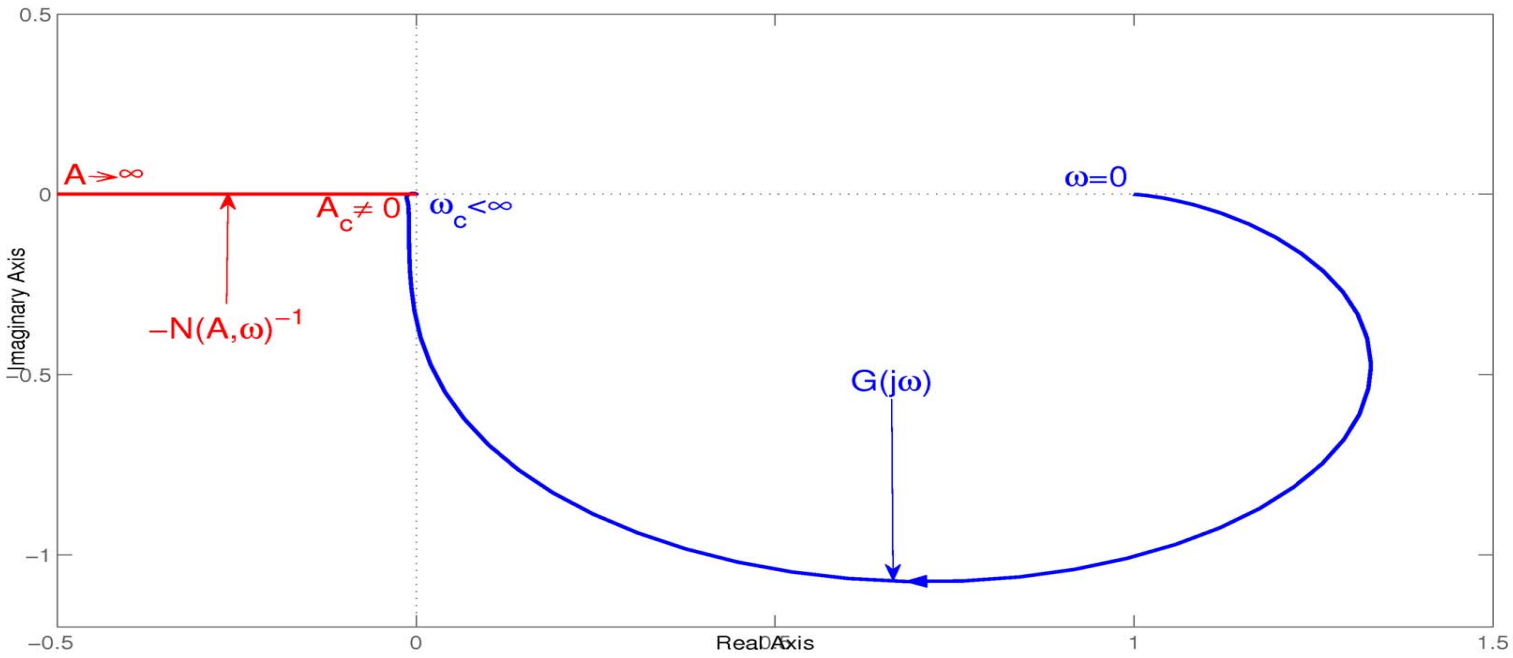

Figure: Graphical solution of the HB eq for system $D(s,d)G(s)$ plus 2nd order actuator

Conventional SMC: DF analysis

Plant plus 2nd order actuator

$$\dot{x}_1 = x_2 \quad ; \quad 0.0001\ddot{u}_a = -0.01\dot{u}_a - u_a + u$$

$$\dot{x}_2 = -x_1 - x_2 + u_a \quad ; \quad \sigma = x_1 + x_2$$

$$u = -\text{sign}(\sigma)$$

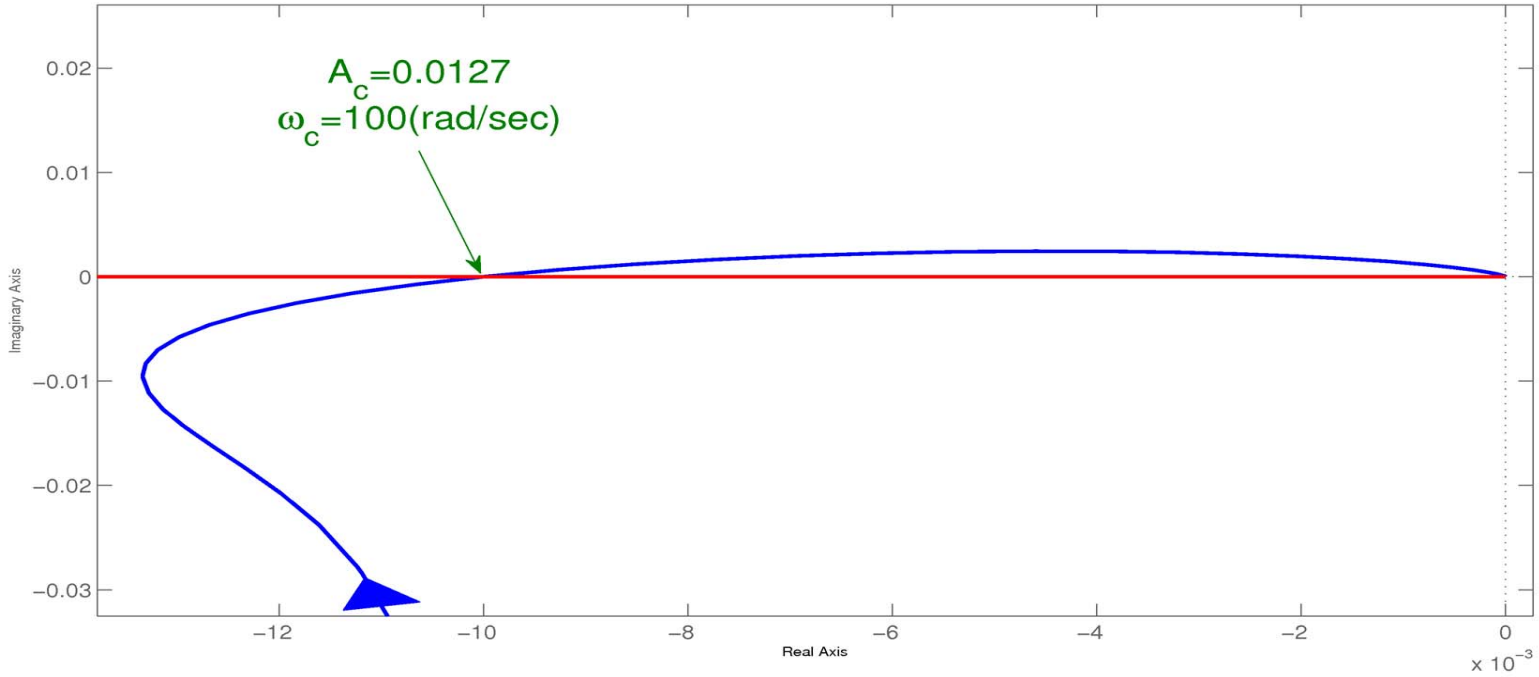

Figure: Zoom

Conventional SMC: DF analysis

Plant plus 2nd order actuator

$$\dot{x}_1 = x_2 \quad ; \quad 0.0001\ddot{u}_a = -0.01\dot{u}_a - u_a + u$$

$$\dot{x}_2 = -x_1 - x_2 + u_a \quad ; \quad \sigma = x_1 + x_2$$

$$u = -\text{sign}(\sigma)$$

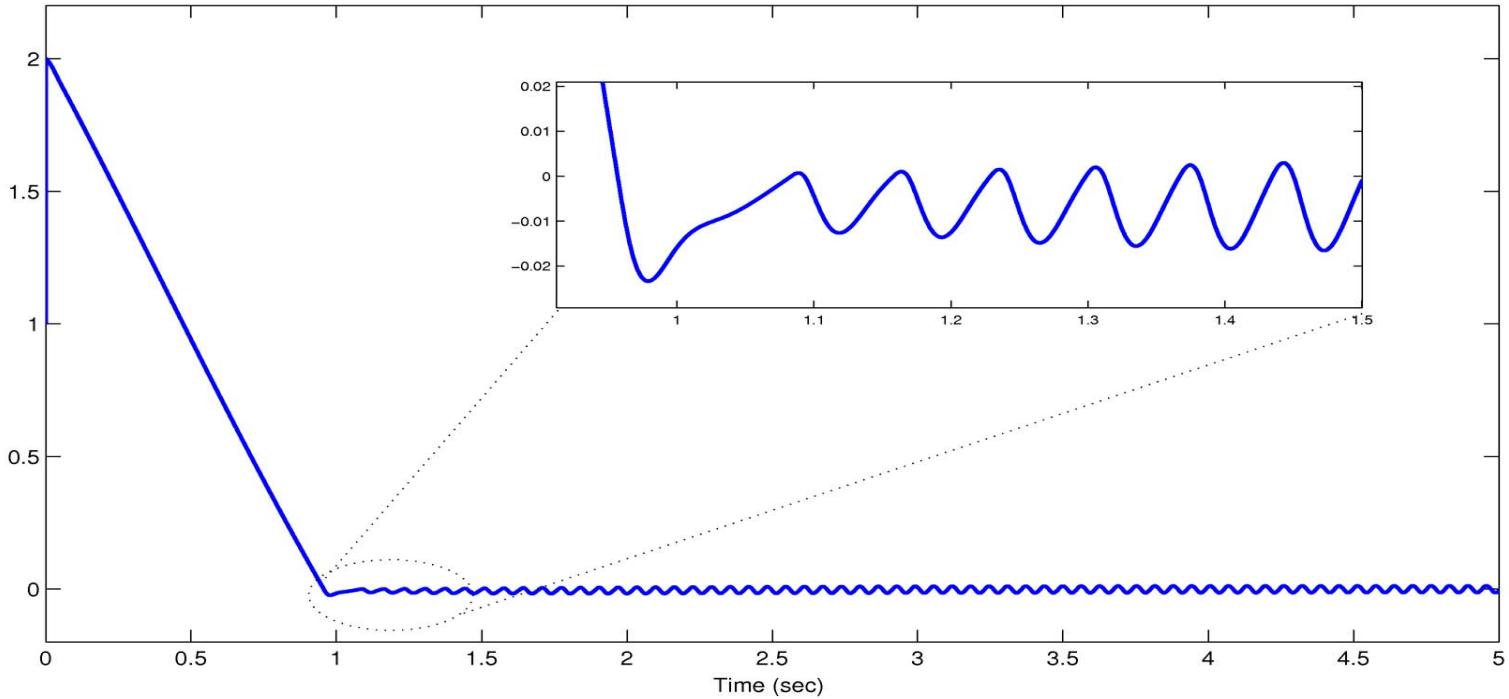

Figure: Surface

Twisting and its DF

Twisting Algorithm

$$\begin{aligned} \ddot{x} &= u; \\ u &= -c_1 sign(x) - c_2 sign(\dot{x}), \end{aligned}$$

with $c_1 > c_2 > 0$.

DF

$$N(A) = N_1 + sN_2 = \frac{4}{\pi A}(c_1 + jc_2),$$

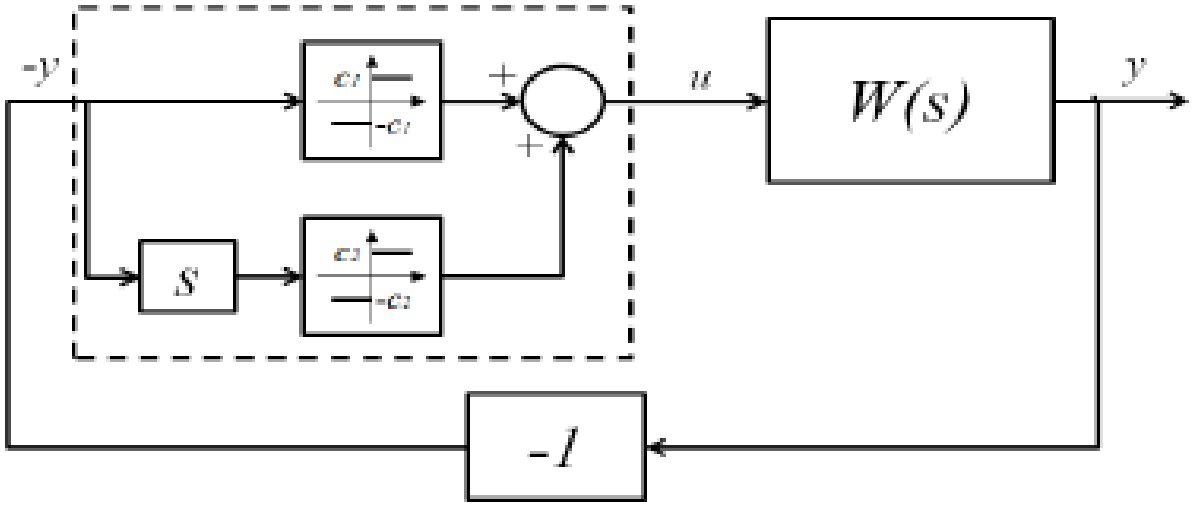

Twisting and its DF

HB eq.

$$W(j\omega) = \pi A \frac{-c_1 + jc_2}{4(c_1^2 + c_2^2)},$$

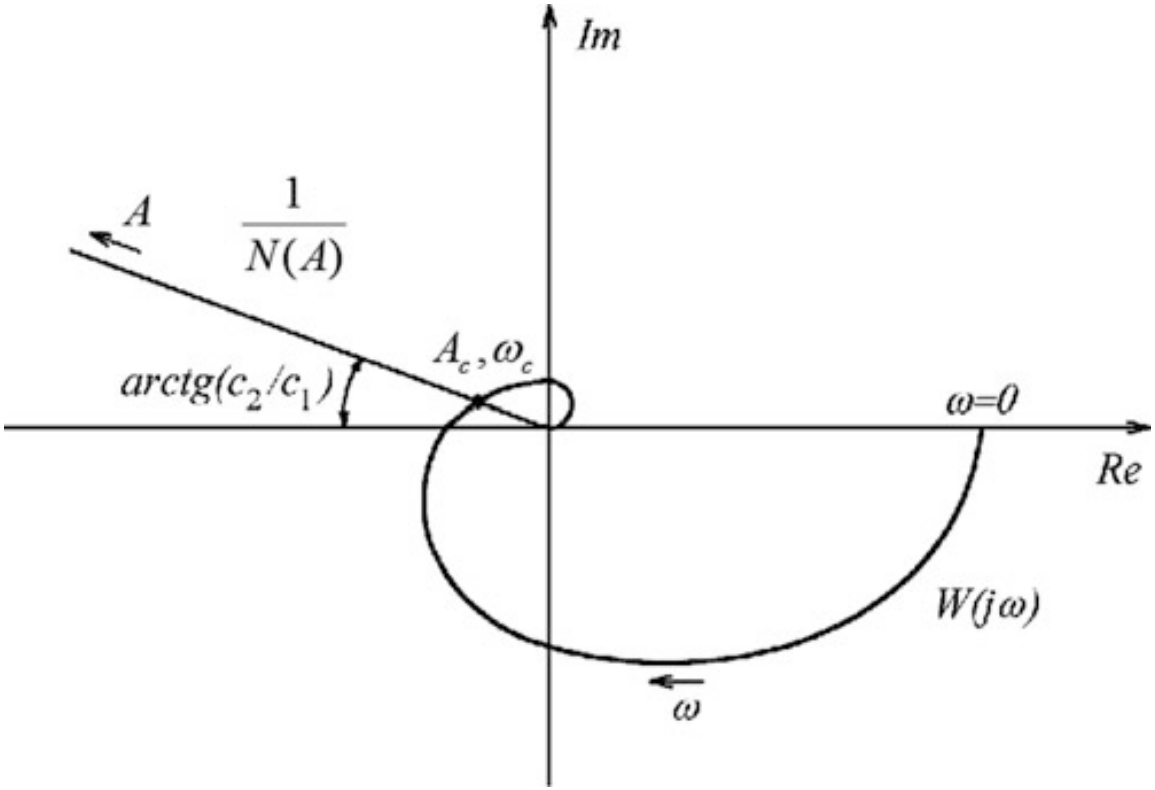

The phase dificit is $arctg(c_2/c_1)$. Finite-time convergence

Terminal Control Law and its DF

Terminal Control Law

$$\begin{aligned} \ddot{x} &= u; \\ u &= -\alpha sign(\dot{x} + \beta |x|^{\rho} sign(x)), \end{aligned}$$

with $0.5 < \rho < 1$.

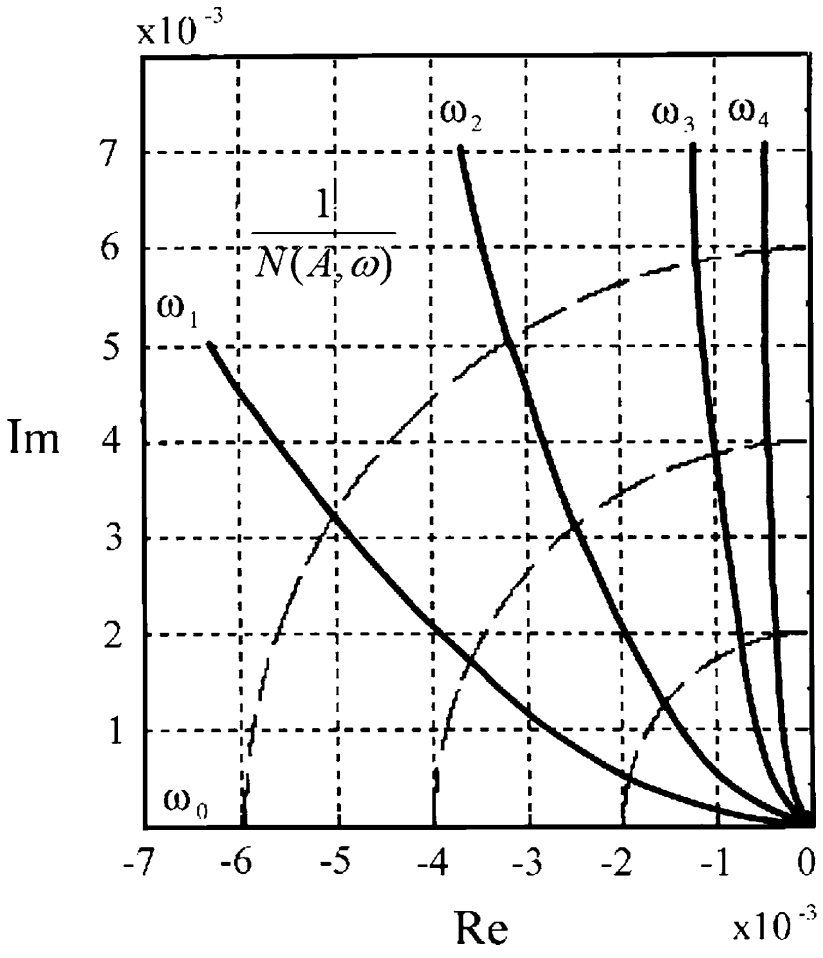

Super-twisting and its DF

ST algorithm

$$\begin{aligned} \dot{x} &= u; \\ u &= -\beta|\sigma|^{1/2} sign(\sigma) + u_s, \\ \dot{u}_s &= -\alpha sign(\sigma), \end{aligned}$$

DF

$$N(A,\omega) = \frac{4\alpha}{\pi A j\omega} + \frac{1.1128\beta}{\sqrt{A}},$$

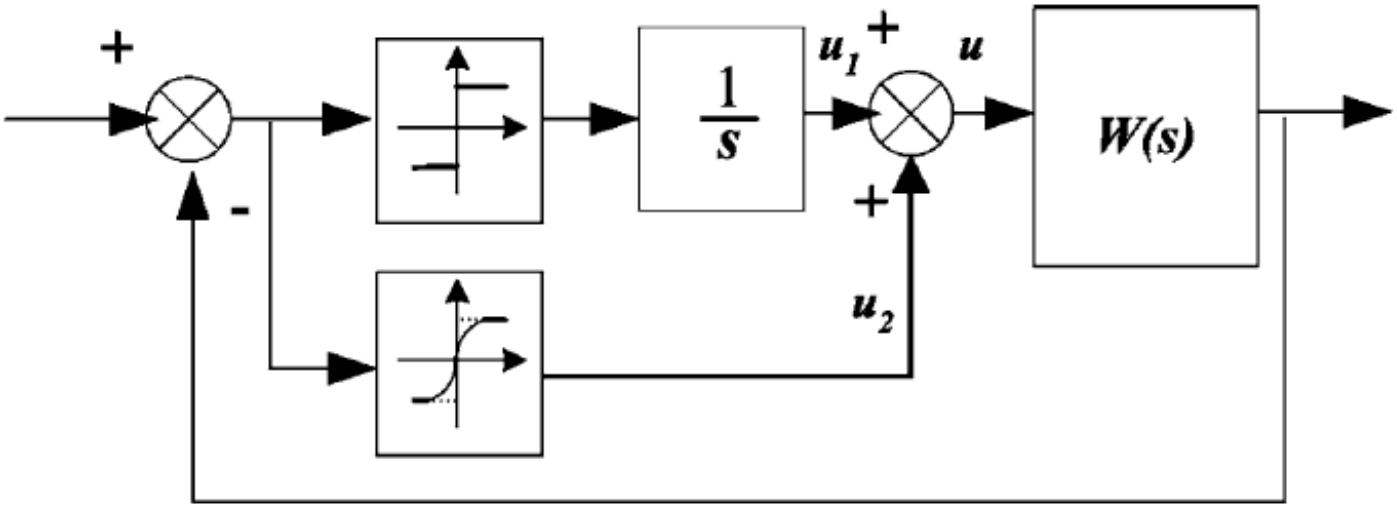

Super-twisting and its DF

HB eq.

$$W(j\omega) = -\frac{0.8986\frac{\sqrt{A}}{\beta} + j1.1329\frac{\alpha}{\beta^2\omega}}{1 + 1.3092\frac{\alpha^2}{\beta^2 A\omega^2}}$$

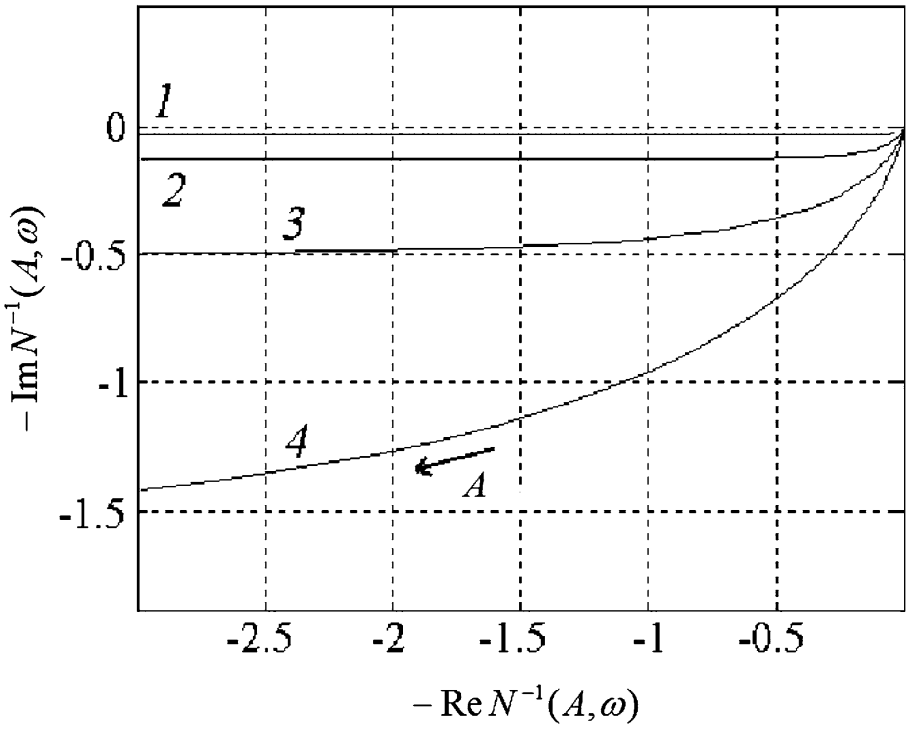

Super-twisting and its DF

Existence of the periodic solutions

Write HB eq. as: $N(A) = -W^{-1}(j\omega)$,

$$\frac{4\gamma}{\pi A}\frac{1}{j\omega} + 1.1128\frac{\lambda}{\sqrt{A}} = -W^{-1}(j\omega). \tag{14}$$

Consider the real part of both sides

$$1.1128\frac{\lambda}{\sqrt{A}} = -\operatorname{Re} W^{-1}(j\omega) \tag{15}$$

Eliminating A from eqs. (14)-(15),

$$\Psi(\omega) = \frac{4\gamma}{\pi\omega}\frac{1}{\operatorname{Im} W^{-1}(j\omega)} - \left(\frac{1.1128\lambda}{\operatorname{Re} W^{-1}(j\omega)}\right)^2 = 0. \tag{16}$$

Eq. (16) has ONLY one unknown variable, ω.

Super-twisting and its DF

Existence of the periodic solutions

Once ω is obtained from Eq. (16).

Amplitude, A_c can be computed as:

$$A_c = \frac{4\gamma}{\pi\omega_c}\frac{1}{\operatorname{Im} W^{-1}(j\omega_c)}. \tag{17}$$

Super-twisting and its DF

Stability of periodic solution

If the following inequality holds then the periodic solution given by Equation (16) is locally stable:

$$\mathrm{Re}\,\frac{h_1(A,\omega)}{h_2(A,\omega)+N(A,\omega)\frac{\partial \ln W(s)}{\partial s}\,|_{s=j\omega}} < 0, \tag{18}$$

where $h_1(A,\omega) = \frac{1.1128\lambda}{2A^{\frac{3}{2}}} - j\frac{4\gamma}{\pi\omega A^2}$, $h_2(A,\omega) = \frac{4\gamma}{\pi\omega^2 A}$

Super-twisting and its DF

Stability of periodic solution

Proof:

- Assume that the HB eq. holds for small perturbations.
- Damped oscillation of the complex frequency $j\omega + (\triangle\sigma + j\Delta\omega)$ corresponds to the modified amplitude $(A + \triangle A)$:

$$N(A + \triangle A, j\omega + (\triangle\sigma + j\Delta\omega))W(j\omega + (\triangle\sigma + j\Delta\omega)) = -1. \tag{19}$$

  $N(A, \omega)$ is DF of Super-twisting.
- Find the conditions when $\Lambda = \triangle\sigma/\triangle A$ is negative.

Super-twisting and its DF

Stability of periodic solution

Proof(continue):

- Take the derivative of (19) with respect to $\triangle A$ and write an equation for the amplitude perturbation $\triangle A$.

$$\left\{ \frac{dN(\triangle A, \triangle\sigma, \Delta\omega)}{d\triangle A}|_{\triangle A=0} W(j\omega) + \frac{dW(\triangle\sigma, \Delta\omega)}{d\triangle A}|_{\triangle A=0} N(A,\omega) \right\} \triangle A = 0. \quad (20)$$

- Take derivatives of N and W, and consider them composite functions:

$$\frac{dN(\triangle A, \triangle\sigma, \Delta\omega)}{d\triangle A}|_{\triangle A=0} = -j\frac{4\gamma\omega}{\pi A^2} - \frac{1.1128\lambda}{2A^{\frac{3}{2}}} + \frac{4\gamma A}{\pi\omega^2}\left(\frac{d\triangle\sigma}{d\triangle A} + j\frac{d\triangle\omega}{d\triangle A}\right). \quad (21)$$

$$\frac{dW}{d\triangle A}|_{\triangle A=0} = \frac{dW}{ds}|_{s=j\omega}\left(\frac{d\triangle\sigma}{d\triangle A} + j\frac{d\triangle\omega}{d\triangle A}\right) \quad (22)$$

- Solve eq. (20) for$(\frac{d\triangle\sigma}{d\triangle A} + j\frac{d\triangle\omega}{d\triangle A})$ and taking account of (21) and (22), an analytical formula is obtained, where the real part is (18).

Is It Reasonable to Substitute Discontinuous SMC by Continuous HOSMC?

Motivation Example. Relative Degree One

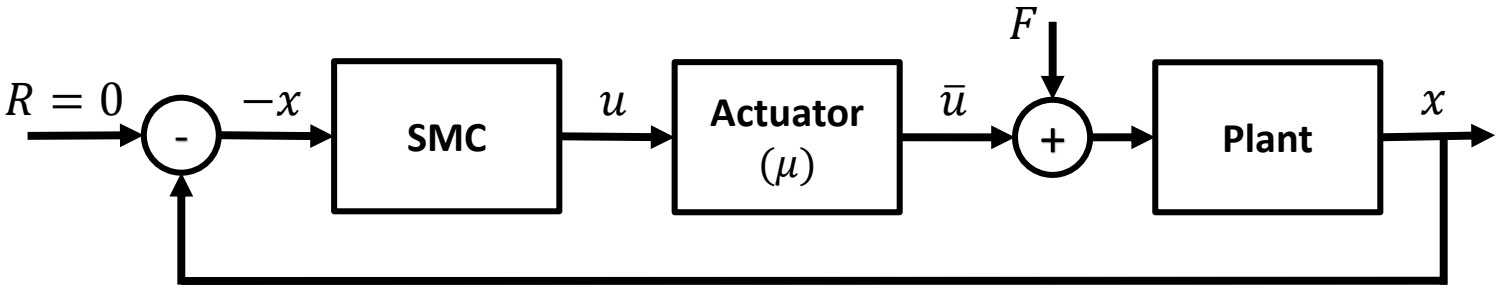

Plant

$$\dot{x}(t) = \bar{u}(t) + F(t)$$

Actuator

$$\dot{z}(t) = \begin{bmatrix} 0 & 1 \\ -\frac{1}{\mu^2} & -\frac{2}{\mu} \end{bmatrix} z(t) + \begin{bmatrix} 0 \\ \frac{1}{\mu^2} \end{bmatrix} u(t)$$

$$\bar{u}(t) = \begin{bmatrix} 1 & 0 \end{bmatrix} z(t)$$

Assumption 1

The parasitic dynamics (Actuator) is not required for the design of the SMC/HOSMC gains and its effects can be measured through the ATC μ.

Considered SMC and Disturbances

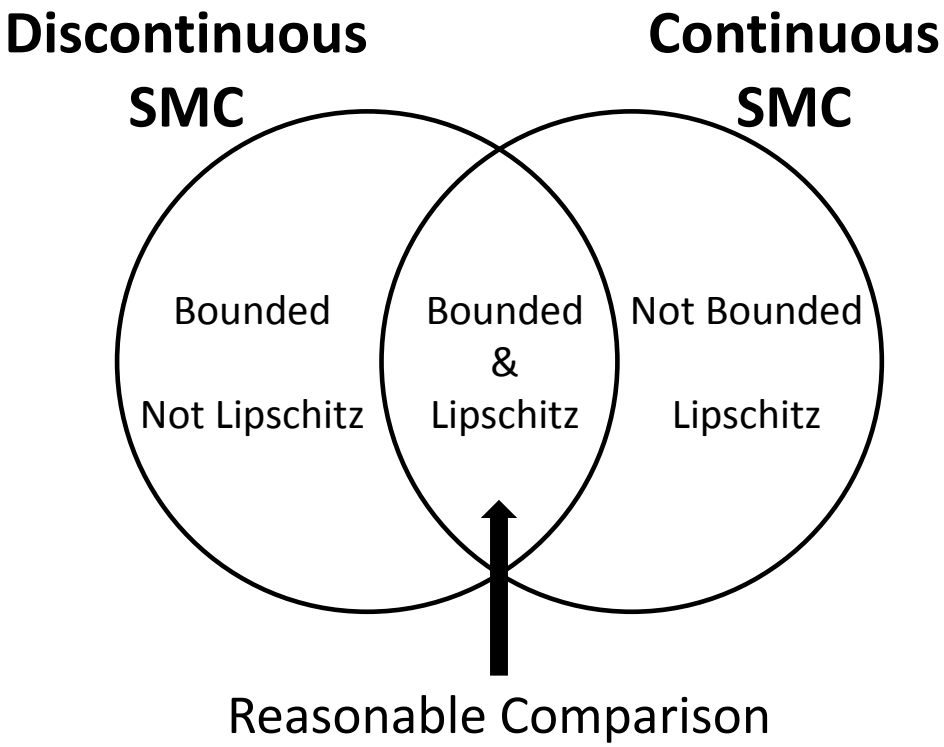

Disturbance form

$$F(t) = \alpha \sin(\Omega t)$$

where the upperbounds

$$\begin{array}{rcccl} |F| & \leq & \alpha & = & \delta \\ |\dot{F}| & \leq & \alpha\,\Omega & = & \Delta \end{array}$$

are assumed known.

FOSMC

$$u = -M\,\mathrm{sign}(x)$$

with $M = 1.1\delta$.

Twisting Filter

$$\dot{u} = -c_1\,\mathrm{sign}(x) - c_2\,\mathrm{sign}(\dot{x})$$

with $c_1 = 2.3\Delta$, $c_2 = 1.1\Delta$.

STA

$$\begin{array}{rcl} u & = & -k_1|x|^{1/2}\,\mathrm{sign}(x) + v \\ \dot{v} & = & -k_2\,\mathrm{sign}(x) \end{array}$$

with $k_1 = 1.5\Delta^{1/2}$, $k_2 = 1.1\Delta$.

Simulations Results for Some Values of ATC and Increasing Ω

Control \ Ω		1	10	100
Discontinuous Control				
FOSMC	$\mu = 10^{-1}$	1.366×10^{-1}	1.692×10^{-1}	0.934×10^{-1}
	$\mu = 10^{-2}$	1.092×10^{-2}	1.361×10^{-2}	1.692×10^{-2}
	$\mu = 10^{-3}$	1.064×10^{-3}	1.096×10^{-3}	1.362×10^{-3}
Continuous Control				
STA	$\mu = 10^{-1}$	1.243×10^{-1}	8.663×10^{-1}	6.4041
	$\mu = 10^{-2}$	9.431×10^{-4}	1.302×10^{-2}	8.694×10^{-2}
	$\mu = 10^{-3}$	8.915×10^{-6}	9.445×10^{-5}	1.343×10^{-3}

Table: Sliding-Mode Amplitude Accuracy

Discussion Aspects

Professor V. Utkin Hypothesis

Simulations confirms that for any value of ATC there exist a **bounded disturbance** for which the amplitude of possible oscillations produced by FOSMC is **lower** than the obtained applying STA.

Hypothesis 2

It should exists a value of ATC for which the amplitude of chattering produced by FOSMC and STA are **the same**.

Hypothesis 3

For any bounded and Lipschitz disturbance, the amplitude of possible oscillations produced by STA may be less than the obtained using FOSMC if the actuator dynamics is **fast enough**.

Methodology

The parameters that characterizes the chattering of the steady-state behavior of the nominal system ($F(t) = 0$) are:

1. Amplitude of periodic motion (A)
2. Frequency of periodic motion (ω)
3. Average power (P)

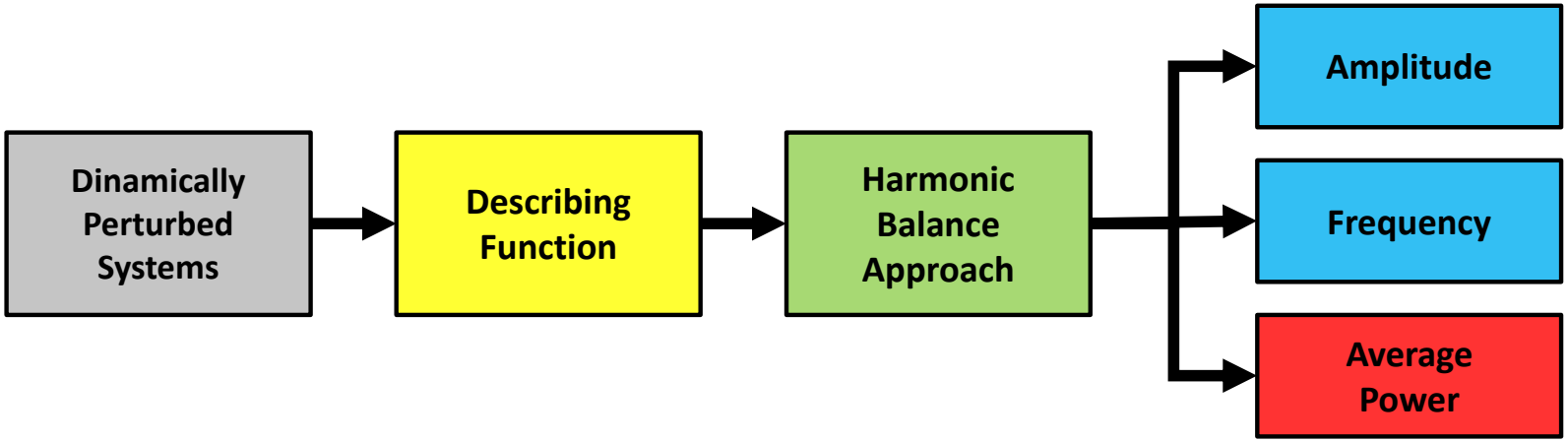

DF Analysis

Assumption 2 (Low pass filter hypothesis)

The dynamically perturbed system (Actuator-Plant) $W(s)$ has *low pass filter* characteristics with respect to the higher harmonics of the output $x(t)$. Hence the output of the system converges to a periodic motion [Gelb (1968)], [Boiko (2009)], which can be well-approximated by its first-harmonic,

$$\begin{aligned} x(t) &= A\sin(\omega t), \\ \dot{x}(t) &= A\omega\cos(\omega t). \end{aligned}$$

Harmonic Balance Approach

Parameters of a possible periodic motion, amplitude A and frequency ω, can be found by solving the Harmonic Balance equation (see for example [Gelb (1968)], [Atherton (1975)])

$$N(A,\omega)W(j\omega) = -1$$

where $N(A,\omega)$ is the DF of the non-linearity (SMC algorithm).

Average Power Approach

L_p-chattering [Levant (2010)]

$$\text{chatt}_{L_p}(x) = \left(\int_0^T \dot{x}^p(\tau) d\tau \right)^{1/p}$$

Drawbacks

- There is no chattering in ideal sliding-mode motion!
- How to compute chatt_{L_p}?

$$\Downarrow$$

A novel approach: Average (Real) Power

$$\mathrm{P} = \frac{1}{T} \int_0^T \bar{u}(\tau) x(\tau) d\tau = \frac{\omega}{2\pi} \int_0^{\frac{2\pi}{\omega}} \frac{A^2 \omega}{2} \sin(2\omega\tau) d\tau = \frac{4A^2\omega}{\pi}$$

Preliminaries

Let the dynamically perturbed system (actuator-plant)

$$W(s) = \frac{1}{s(\mu s + 1)^2}$$

FOSMC

$$u = -M\,\mathrm{sign}(x)$$

Twisting Filter

$$\dot{u} = -c_1\,\mathrm{sign}(x) - c_2\,\mathrm{sign}(\dot{x})$$

STA

$$\begin{array}{rcl} u & = & -k_1|x|^{1/2}\,\mathrm{sign}(x) + v \\ \dot{v} & = & -k_2\,\mathrm{sign}(x) \end{array}$$

DF

$$N(A) = \frac{4M}{\pi A}$$

DF

$$N(A,\omega) = \frac{4}{\pi A\omega}\,(c_2 - jc_1)$$

DF

$$N(A,\omega) = \frac{2\alpha_1 k_1}{\pi A^{1/2}} - j\frac{4k_2}{\pi A\omega}$$

with $\alpha_1 = 1.748$.

Chattering Parameters Estimated by HB

FOSMC

$$A = \mu\left(\frac{2M}{\pi}\right)$$

$$\omega = \frac{1}{\mu}$$

$$P = \mu\left(\frac{16M^2}{\pi^3}\right)$$

Twisting Filter

$$A = \mu^2\left(\frac{2c_2^4}{\pi(\sqrt{c_1^2+c_2^2}-c_1)^3}\right)$$

$$\omega = \frac{1}{\mu}\left(\frac{\sqrt{c_1^2+c_2^2}-c_1}{c_2}\right)$$

$$P = \mu^3\left(\frac{16c_2^7}{\pi^3(\sqrt{c_1^2+c_2^2}-c_1)^5}\right)$$

STA

$$A = \mu^2\left(\frac{\alpha_1^2k_1^2+4\pi k_2}{\pi\alpha_1 k_1}\right)^2$$

$$\omega = \frac{1}{\mu}\left(\frac{\alpha_1^2k_1^2}{\alpha_1^2k_1^2+4\pi k_2}\right)^{1/2}$$

$$P = \mu^3\left(\frac{4(\alpha_1^2k_1^2+4\pi k_2)^{7/2}}{\pi^5\alpha_1^3k_1^3}\right)$$

Chattering Parameters as Function of μ

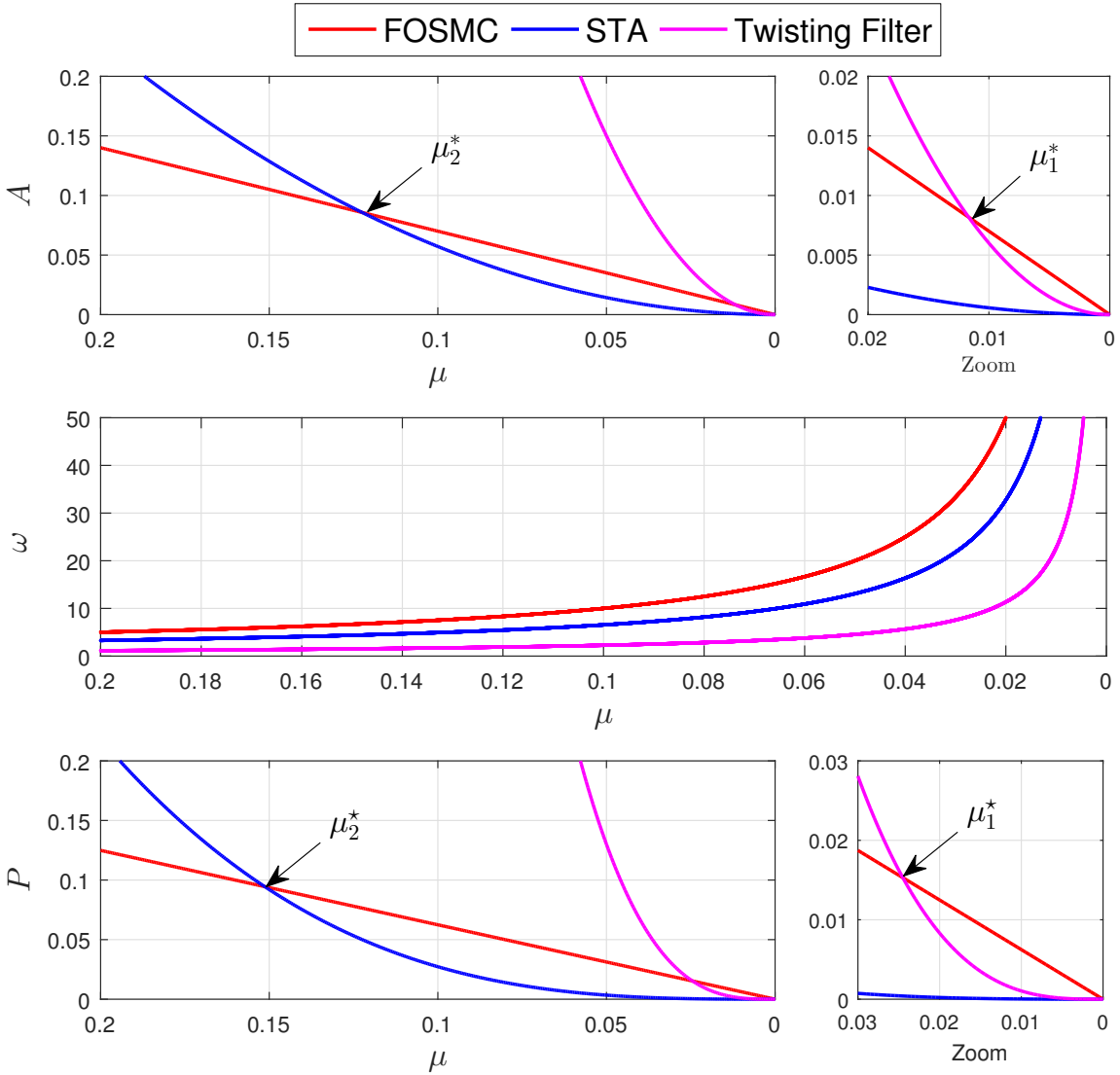

Figure: Chattering Parameters as Function of ATC $\mu \to 0$, with $\delta = \Delta = 1$.

Amplitude Discussion

Result 1

There exist a value of the ATC for which the amplitude of oscillations caused by FOSMC is equal that the produced by Twisting Filter,

$$\mu_1^* = \frac{M(\sqrt{c_1^2 + c_2^2} - c_1)^3}{c_2^4}$$

Result 2

There exist a value of the ATC for which the amplitude of oscillations caused by FOSMC is equal that the produced by STA,

$$\mu_2^* = \frac{2\pi M(\alpha_1 k_1)^2}{\left((\alpha_1 k_1)^2 + 4\pi k_2\right)^2}$$

Frequency Discussion

Result 3

The frequency of oscillations caused by STA is always lower than the produced by FOSMC.

Result 4

The frequency of oscillations caused by Twisting Filter is always lower than the produced by FOSMC.

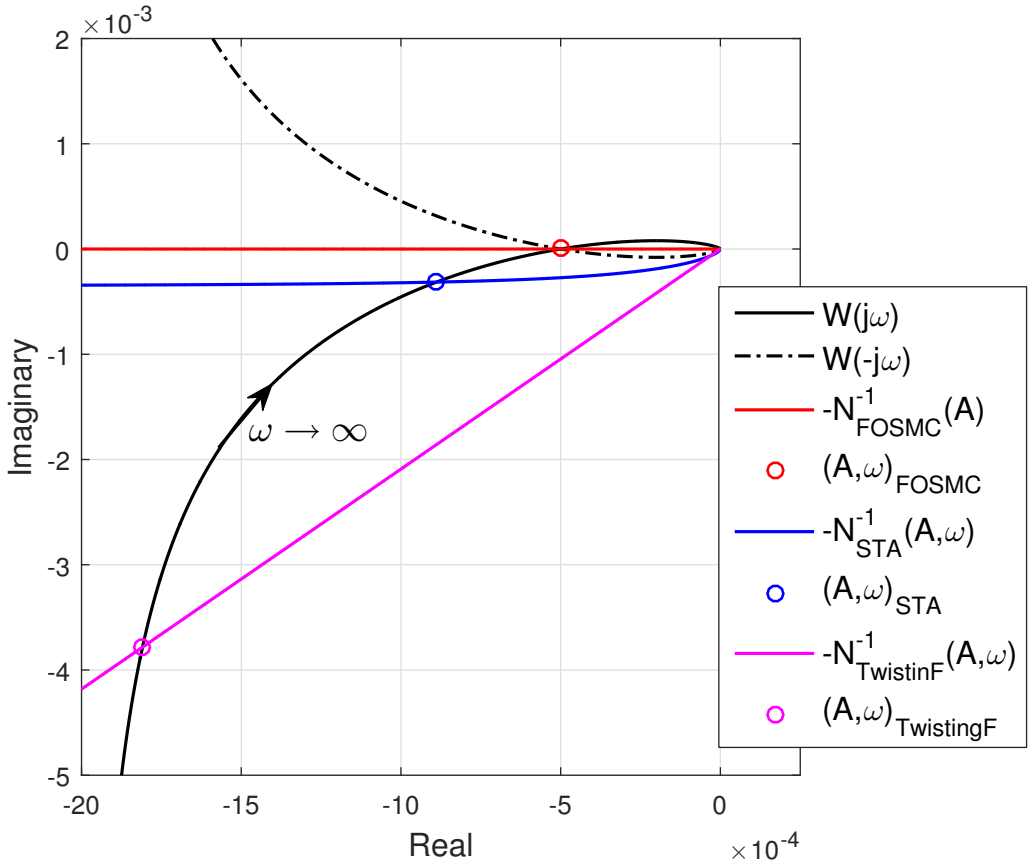

Figure: Graphical Solution of HB equation

Average Power Discussion

Result 5

There exist a value of the ATC for which the average power of oscillations caused by FOSMC is equal that the produced by Twisting Filter,

$$\mu_1^\star = \frac{M(\sqrt{c_1^2 + c_2^2} - c_1)^{5/2}}{c_2^{7/2}}$$

Result 6

There exist a value of the ATC for which the average power of oscillations caused by FOSMC is equal that the produced by STA,

$$\mu_2^\star = \frac{2\pi M(\alpha_1 k_1)^{3/2}}{\left((\alpha_1 k_1)^2 + 4\pi k_2\right)^{7/2}}$$

Selection of STA Gains to Minimize the Amplitude of Chattering

Minimum Amplitude for a given $k_2 > \Delta$

$$k_1 = \left(\frac{4\pi k_2}{\alpha_1^2}\right)^{1/2} = 2.028\sqrt{k_2}$$

Proposed STA Gains†

$$k_1 = 2.127\sqrt{\Delta}$$
$$k_2 = 1.1\Delta$$

† Sufficient stability conditions are satisfied:

$$k_1 > 1.449\sqrt{\Delta}$$
$$k_2 = 1.1\Delta$$

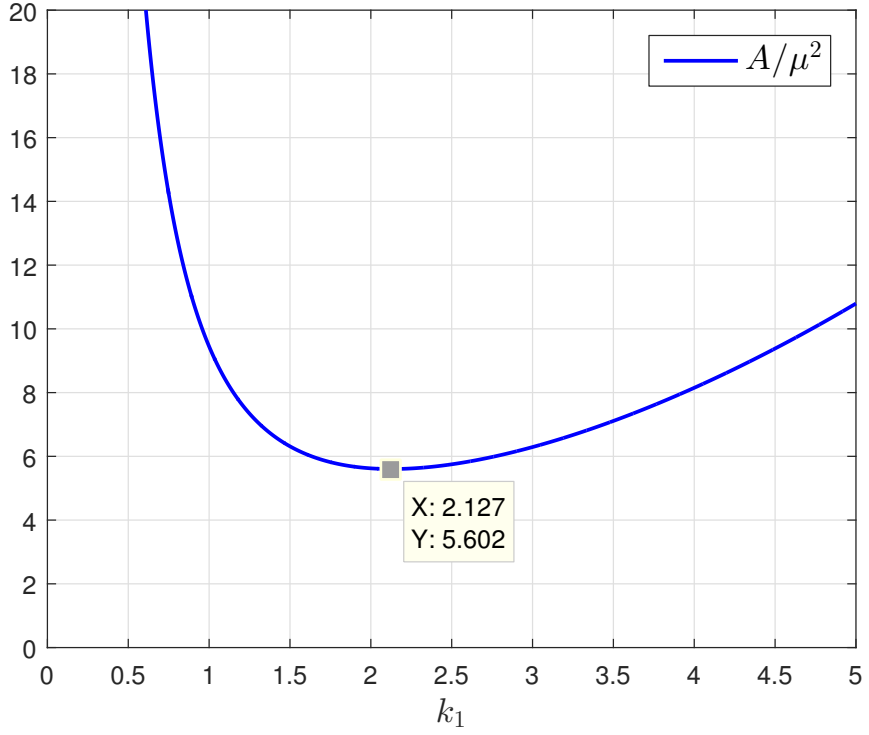

Figure: Amplitude as Function of k_1

Selection of STA Gains Minimize the Average Power

Minimum Average Power for a given $k_2 > \Delta$

$$k_1 = \left(\frac{3\pi k_2}{\alpha_1^2}\right)^{1/2} = 1.756\sqrt{k_2}$$

Proposed STA Gains†

$$k_1 = 1.842\sqrt{\Delta}$$
$$k_2 = 1.1\Delta$$

† Sufficient stability conditions are satisfied:

$$k_1 > 1.449\sqrt{\Delta}$$
$$k_2 = 1.1\Delta$$

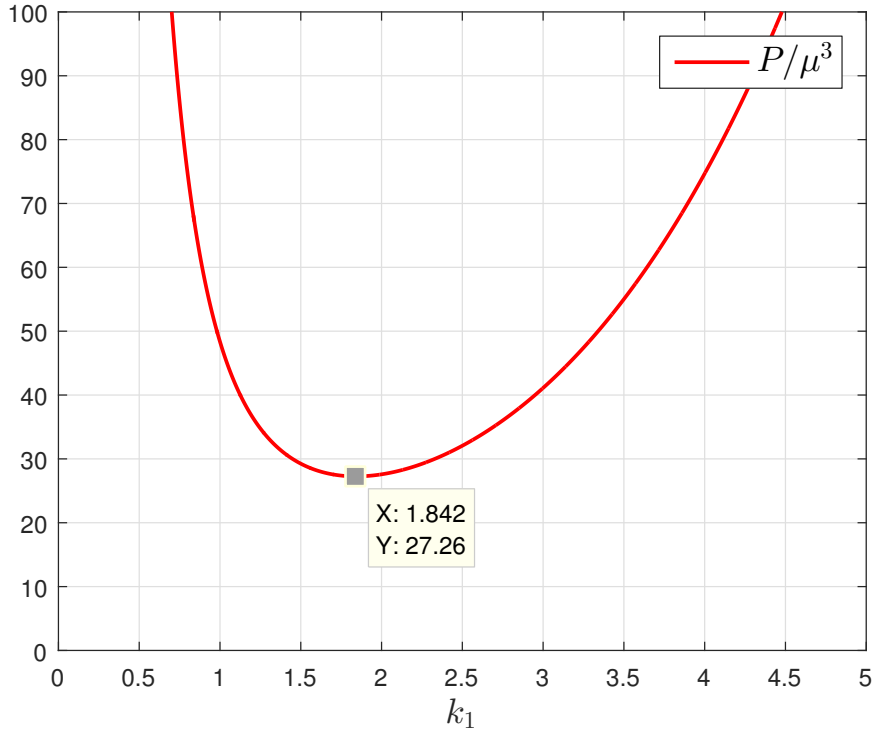

Figure: Average Power as Function of k_1

Motivation Example. Relative Degree Two

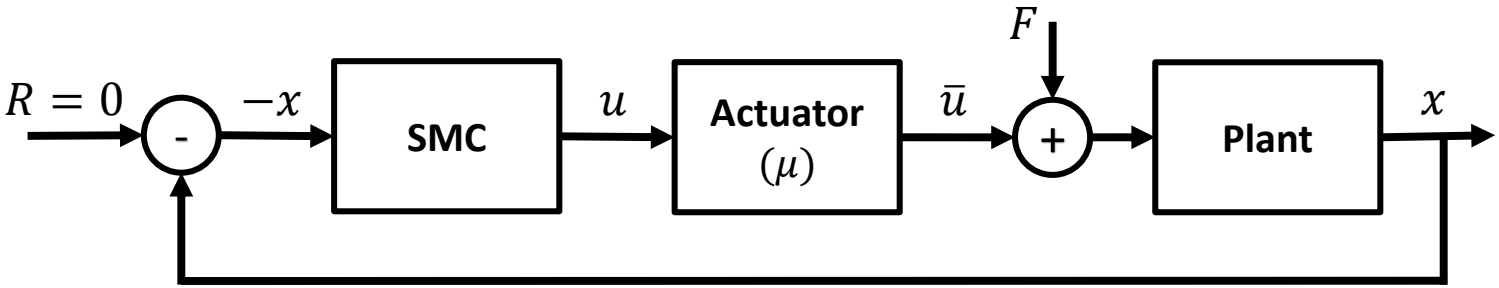

Plant

$$\ddot{x}(t) = \bar{u}(t) + F(t)$$

Actuator

$$\dot{z}(t) = \begin{bmatrix} 0 & 1 \\ -\frac{1}{\mu^2} & -\frac{2}{\mu} \end{bmatrix} z(t) + \begin{bmatrix} 0 \\ \frac{1}{\mu^2} \end{bmatrix} u(t)$$

$$\bar{u}(t) = \begin{bmatrix} 1 & 0 \end{bmatrix} z(t)$$

Assumption 1

The parasitic dynamics (Actuator) is not required for the design of the SMC/HOSMC gains and its effects can be measured through the ATC μ.

Considered SMC and Disturbances

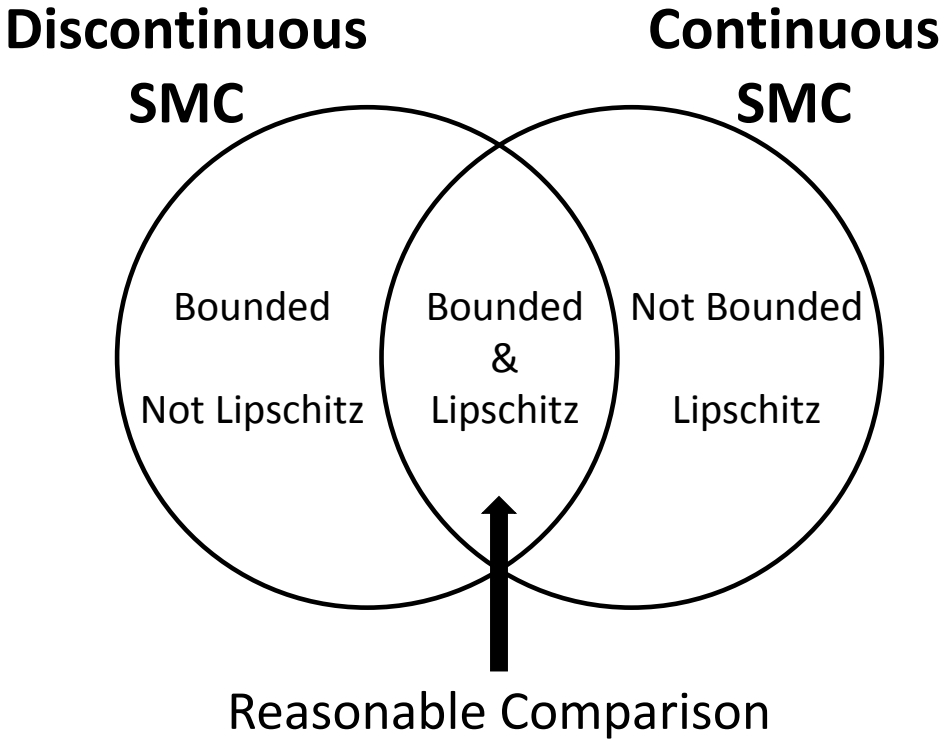

Disturbance form

$$F(t) = \alpha \sin(\Omega t)$$

where the upperbounds

$$\begin{array}{rcccl} |F| & \leq & \alpha & = & \delta \\ |\dot{F}| & \leq & \alpha\,\Omega & = & \Delta \end{array}$$

are assumed known.

Twisting

$$u = -c_1 \operatorname{sign}(x) - c_2 \operatorname{sign}(\dot{x})$$

with $c_1 = 2.3\delta$, $c_2 = 1.1\delta$.

CTA

$$\begin{array}{rcl} u & = & -k_1|x|^{1/2}\operatorname{sign}(x) - k_2|\dot{x}|^{1/2}\operatorname{sign}(\dot{x}) + v \\ \dot{v} & = & -k_3 \operatorname{sign}(x) - k_4 \operatorname{sign}(\dot{x}) \end{array}$$

with $k_1 = 1.5\Delta^{2/3}$, $k_2 = 2.3\Delta^{1/2}$, $k_3 = 1.1\Delta$, $k_4 = 0$.

Average Power Approach

L_p-chattering [Levant (2010)]

$$\text{chatt}_{L_p}(x) = \left(\int_0^T \dot{x}^p(\tau) d\tau \right)^{1/p}$$

Drawbacks

- There is no chattering in ideal sliding-mode motion!
- How to compute chatt_{L_p}?

$$\Downarrow$$

A novel approach: Average (Kinetic) Power

$$\mathrm{P} = \frac{1}{T} \int_0^T \dot{x}^2(\tau) d\tau = \frac{\omega}{2\pi} \int_0^{\frac{2\pi}{\omega}} A^2 \omega^2 \cos^2(\omega\tau) d\tau = \frac{A^2\omega^2}{2}$$

Preliminaries

Let the dynamically perturbed system (actuator-plant)

$$W(s) = \frac{1}{s^2(\mu s + 1)^2}$$

Twisting

$$u = -c_1 \operatorname{sign}(x) - c_2 \operatorname{sign}(\dot{x})$$

CTA

$$\begin{array}{rcl} u & = & -k_1|x|^{1/2}\operatorname{sign}(x) - k_2|\dot{x}|^{1/2}\operatorname{sign}(\dot{x}) + v \\ \dot{v} & = & -k_3\operatorname{sign}(x) - k_4\operatorname{sign}(\dot{x}) \end{array}$$

DF

$$N(A) = \frac{4}{\pi A}(c_1 + jc_2)$$

DF

$$N(A,\omega) = \frac{2\alpha_1 k_1}{\pi A^{2/3}} + \frac{4k_4}{\pi A\omega} + j\left[\frac{2\alpha_2 k_2 \omega^{1/2}}{\pi A^{1/2}} - \frac{4k_3}{\pi A\omega}\right]$$

with $\alpha_1 = 1.821$, $\alpha_2 = 1.748$.

Chattering Parameters Estimated by HB

Twisting

$$A = \mu^2 \left(\frac{2c_2^4}{\pi(\sqrt{c_1^2 + c_2^2} - c_1)^3} \right)$$

$$\omega = \frac{1}{\mu} \left(\frac{\sqrt{c_1^2 + c_2^2} - c_1}{c_2} \right)$$

$$P = \mu^2 \left(\frac{2c_2^6}{\pi^2(\sqrt{c_1^2 + c_2^2} - c_1)^4} \right)$$

CTA with $k_4 = 0$

Solve the non-linear equality for the frequency ω,

$$\frac{k_2}{k_1^{3/4}}(1 - \mu^2\omega^2)^{3/4} - \frac{k_3}{k_1^{3/2}}(1 - \mu^2\omega^2)^{3/2} = 2\mu\,\omega$$

Then, substitute on the amplitude expression,

$$A = \left[\frac{2\alpha_1 k_1}{\pi\omega^2(1 - \mu^2\omega^2)} \right]^{3/2}$$

Chattering Parameters as Function of μ

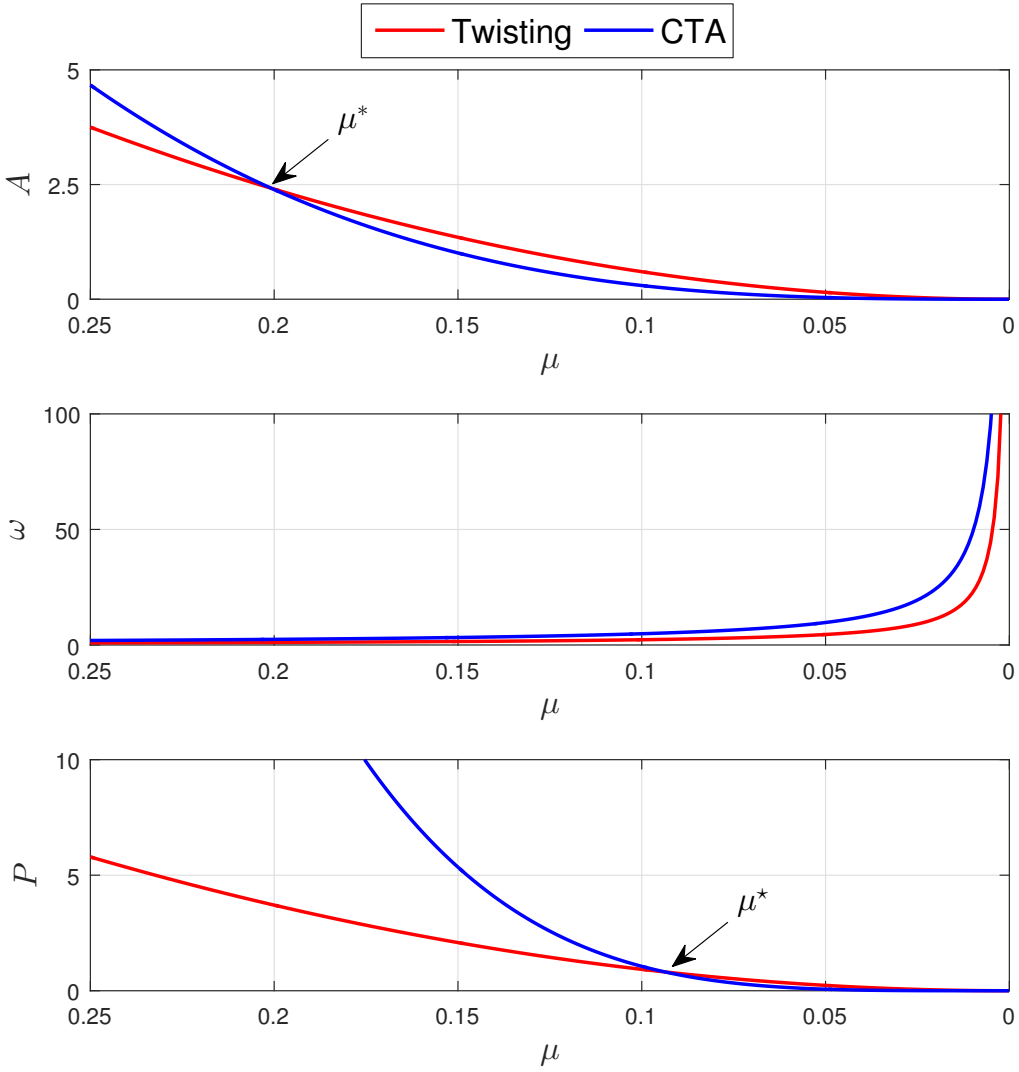

Figure: Chattering Parameters as Function of ATC $\mu \to 0$, with $\delta = 1$, $\Delta = 10$.

Amplitude Discussion

Result 1

There exist a value of the ATC for which the amplitude of oscillations caused by Twisting is equal that the produced by CTA. For the example

$$\mu^* = 0.2$$

Frequency Discussion

Result 2

The frequency of oscillations caused by Twisting is always lower than the produced by CTA.

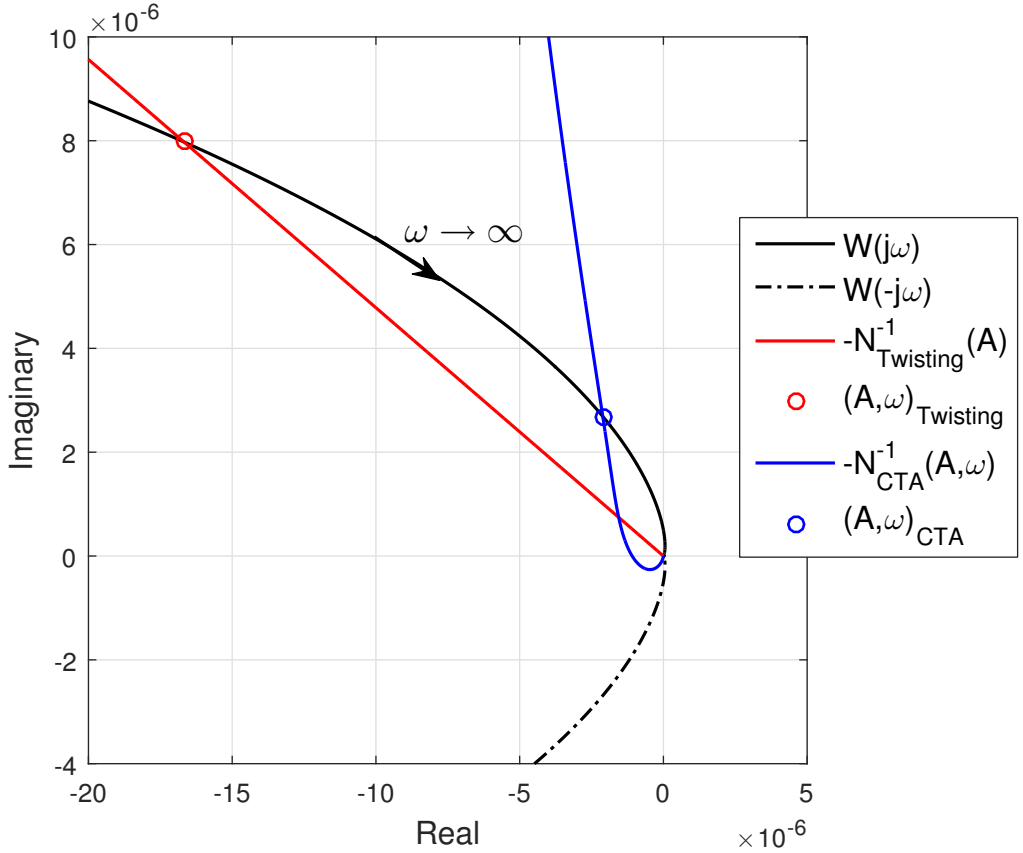

Figure: Graphical Solution of HB equation

Average Power Discussion

Result 3

There exist a value of the ATC for which the average power of oscillations caused by Twisting is equal that the produced by CTA. For the example

$$\mu^{\star} = 0.093$$

References

- D.P. Atherton, *Nonlinear Control Engineering-Describing Function Analysis and Design*, Van Nostrand Reingold: New York and London, 1975.
- I. Boiko, *Frequency-Domain Analysis and Design*, Birkhäuser Basel, 2009.
- A. Gelb and W.E. Vander Velde, *Multiple-Input Describing Functions and Nonlinear System Design*, McGraw Hill, 1968.
- A. Levant, *Sliding order and sliding accuracy in sliding mode control*, International journal of control, vol. 58, no.6, pp. 1247–1263, Taylor & Francis, 1993.
- A. Levant, *Robust exact differentiation via sliding mode technique*, Automatica, vol. 34, no.3, pp. 379–384, Elsevier, 1998.
- A. Levant, *Chattering analysis*, Automatic Control, IEEE Transactions on, vol. 55, no.6, pp. 1380–1389, 2010.

References

- J. A. Moreno and M Osorio, *Strict Lyapunov functions for the super-twisting algorithm*, IEEE Transactions on Automatic Control, vol. 57, no. 4, pp. 1035–1040, IEEE, 2012.
- U. Pérez-Ventura and L. Fridman, *Chattering measurement in SMC and HOSMC*, 2016 14th International Workshop on Variable Structure Systems (VSS), pp. 108–113, IEEE, 2016.
- R. Seeber and M. Horn, *Stability proof for a well-established Super-Twisting parameter setting*, Automatica, 2017.
- A. Swikir and V. Utkin, *Chattering analysis of conventional and super twisting sliding mode control algorithm*, 2016 14th International Workshop on Variable Structure Systems (VSS), pp. 98–102, IEEE, 2016.
- V. Utkin, *Sliding modes in optimization and control problems*, Springer Verlag, New York, 1992.
- V. Utkin, *Discussion Aspects of High Order Sliding Mode Control*, Automatic Control, IEEE Transactions on, vol. 61, pp. 829–833, IEEE, 2016.